Article Recommended Articles Cited by (13) Metrics

ScienceDirect

Journal of Retailing and Consumer Services
May 2024, Article 103778, Volume 78
Show more

Research article Full text access Get rights and content

AMPS: Predicting popularity of short-form videos using multi-modal attention mechanisms in social media marketing environments

Minhwa Cho, Dahye Jeong, Eunil Park Show more

Outline View PDF Download full issue Cite Add to Mendeley

Share

10.1016/j.jretconser.2024.103778

Highlights

- We provide a comprehensive dataset from YouTube Shorts for analysis of short-form video content.
- We propose a novel CDF-based popularity standard, adaptable for real-world scenarios.
- Implementing a multimodal attention mechanism to accurately predict the popularity of short-form videos.
- We utilize the entire video frame, intra-modal and inter-modal relationships for the prediction.

Abstract

FEEDBACK

videos wield immense potential across diverse domains. However, the scarcity of datasets and established metrics for their popularity evaluation poses a challenge in accurately reflecting their real-world distribution. In response, our work introduces a dataset and pioneers a cumulative distribution function-based standard tailored specifically for short-form videos. Our model, AMPS (Attention-based Multi-modal Popularity prediction model of Short-form videos) is designed to effectively forecast the popularity of these videos. Considering *YouTube Shorts*, typically confined to under one minute, our research capitalizes on complete video frames for a holistic prediction of popularity. AMPS harnesses BiLSTM with Self-Attention and Co-Attention mechanisms, enabling a deeper understanding of intra-modal and inter-modal relationships across various modalities. Leveraging full video frame representation, our model significantly enhances prediction accuracy. Comprehensive evaluations against baseline models and machine learning algorithms consistently showcase AMPS' superiority in metrics like G-Mean, average F1-score, and Accuracy. Furthermore, when compared with other open social media datasets, our dataset coupled with AMPS consistently outperforms, affirming its robustness and reliability. Additionally, ablation studies underscore the effectiveness of AMPS' architecture and highlight the significance of each modality in predicting popularity.

Keywords

Social media; Popularity prediction; Multi-modal; Deep learning; Short-form content; Attention mechanism

Previous article in this issue Next article in this issue

1. Introduction

As the shift in content consumption moved from TV to mobile devices, vertical short-form videos have emerged (Canella, 2018). These videos, lasting less than one minute, are designed for easy viewing on mobile devices, offering convenience and accessibility anytime, anywhere. According to a 2020 Hootsuite research (Digital 2020, 2023), there are 480 million mobile internet users, representing a significant portion of the global population. Furthermore, the consumption of mobile videos continues to show remarkable growth, doubling each year. These statistics suggest a forthcoming increase in mobile platforms offering short-form video content (Canella, 2018; Okazaki and Barwise, 2011). Aligned with these trends, social media and video platforms, including *Instagram*, *YouTube*, and *Netflix*, have introduced short-form video platforms

such as *TikTok* have gained popularity in the global video content market (Chandrasekaran et al., 2019).

Short-form videos have found application across diverse fields and presented considerable market scalability (Dolega et al., 2021; Agrawal and Mittal, 2022). Their exceptional accessibility, allowing users to consume content anytime, anywhere via mobile devices, facilitates their versatile use across various domains (Mondal et al., 2023). In particular, these videos have gained significant popularity due to their convenience during commutes or short breaks. Furthermore, their ease of creation has led to a wide array of content (Zhou, 2019). Capitalizing on these advantages, short-form videos have transcended mere entertainment and expanded into realms such as marketing, advertising, news production, and education. They have become a potent tool for conveying varied messages and disseminating information succinctly (Song et al., 2021; Assad, 2023; Zhang, 2020; Nguyen and Diederich, 2023).

According to statistics from Collab Asia, a company specializing in YouTube creators, channels incorporating Shorts experience a 2.3-fold increase in average watch time compared to those that do not (Contents Korea 2023, 2023). This underscores the surging popularity of short-form content and aligns with YouTubes' decision to diversify ad revenue distribution, earmarking a share for short-form creators starting in February 2023 (Youtube Shorts monetization policies, 2023). This dynamic shift is expected to foster the emergence of more creators and the expansion of diverse businesses. Hence, understanding and predicting the trajectory of short-form content popularity is crucial in this evolving media landscape.

While various studies have delved into predicting content popularity (Arora et al., 2019; Ladhari et al., 2020), there is a notable dearth of research and datasets specifically dedicated to forecasting the popularity of short-form videos. Among the existing studies addressing this objective, one utilized Graph Convolutional Networks (GCN) to forecast the popularity of short videos (Zhang et al., 2020). However, their approach primarily centered on community-based analysis and lacked detailed examination of the specific elements within short-form videos that influence their popularity. Consequently, we curated a dataset integrating metadata sourced from YouTube Shorts, laying the groundwork for more comprehensive exploration in this domain. The dataset is available at https://github.com/dxlabskku/AMPS_short-form-popularity ↗ .

In the majority of previous studies, a popularity score, referenced in works such as (Khosla et al., 2014; Zohourian et al., 2018; Said et al., 2020; Bielski and Trzcinski, 2018), was established to forecast popularity. This metric served as a benchmark for the regression or categorization of popular videos. However, the popularity standards set in these earlier studies pose challenges in

score using equal proportions of the median. Consequently, we propose an alternative popularity standard specifically tailored to suit short-form videos, aiming to complement and augment the existing popularity score.

A number of scholars have overlooked both intra-modal interactions and inter-modal relationships in popularity prediction. Understanding intra-model interactions allows for the identification of influential information within each modality, while leveraging inter-model interactions harnesses the complementary strengths between modalities. These interactions play notable roles in acquiring high-level contextual information through multi-modalities (Sun et al., 2021)

Hence, we introduce the Attention-based Multi-modal Popularity Prediction of Short-form videos Model (AMPS). AMPS utilizes an Attention Mechanism to comprehend high-level contextual information across multiple modalities for predicting popularity. By employing BiLSTM and Self-Attention Mechanism, it adeptly captures essential information and patterns within sequential video and text modalities (S. et al., 2022; Qiu et al., 2022; Xie et al., 2019). Moreover, the Co-Attention Mechanism facilitates understanding interactions between these modalities (Zou et al., 2022; Ghosal et al., 2018; Wu et al., 2021). In addition, AMPS, specifically targeting YouTube Shorts, aims to harness complete video frames for comprehensive popularity prediction.

We present a multimodal-based approach tailored for predicting the popularity of short-form videos. This paper delves into the following research questions (RQs):

- **RQ1**: Can our popularity standard based on cumulative distribution function (CDF) be adaptable and effective in real-world scenarios?
- **RQ2**: How do intra-modal and inter-modal relationships influence the effectiveness of popularity prediction models?
- **RQ3**: What impact does utilizing the entire video frame have on predicting the popularity of short-form videos?

To assess the efficiency of the CDF-based popularity standard and our proposed Attention-based Multi-modal Popularity Prediction Model of Short-form videos Model (AMPS), we conducted experiments on the two datasets, comparing their performance against other models. Our findings demonstrate superior performance compared to the latest methods. In addition, we

contributions of our research are as follows:

- By constructing and providing a dataset from *YouTube Shorts*, a prominent platform for short-form videos, we offer a valuable resource for comprehending content within this format.
- The introduction of our new popularity standard presents a more realistic and pragmatic approach to gauging content popularity, reflecting a shift towards a more practical measurement.
- Our utilization of multi-modal information—video, text, and metadata features—through the implementation of an Attention mechanism provides methodological insights into the intricate relationships within and between modalities that influence popularity.

The structure of this paper is presented as follows: Section 2 initiates a comprehensive review of related work. Section 3 introduces the YouTube Shorts dataset we constructed and presents the proposed CDF-based popularity standard. Section 4 outlines the Attention-based Multi-modal Popularity Prediction Model of Short-form videos Model (AMPS). Sections 5 and 6 show our experiments with detailed results, and concluding remarks, respectively.

2. Related work

2.1. Uni-modal contents popularity prediction

Prior research focused on predicting content popularity primarily centered on images or videos (Liu et al., 2017). For instance, Ding et al. (2019) introduced a model for Automatic Image Popularity Assessment (IPA). This model integrates both visual and non-visual factors, employing a deep neural network to forecast the number of likes and comments an image might receive. Their experimentation on platforms such as Instagram and other social media platforms showcased exceptional performance.

In contrast, Lau et al. Rui et al. (2019) investigated the factors influencing view counts on YouTube videos. Their study encompassed attributes like Likes, Dislikes, Comment Count, Comment Disabled, Rating Disabled, and Video Error/Removed. They introduced two regression-based models to predict view counts, revealing that the Ordinary Least Square approach generally outperformed the Online Gradient Descent method.

YouTube videos using features akin to Likes, Dislikes, Comment Count, Comment Disabled, Rating Disabled, and Video Error/Removed. The employed XGBoost model underwent processes such as feature selection, fusion, MinMax normalization, and fine-tuning precision parameters (i.e., gamma, eta, and learning rate), resulting in an accuracy of 86% and precision of 64%. However, the video features selected in this study might not comprehensively encapsulate the intricate characteristics of videos.

Thus, we attempt to address this limitation by representing videos using deep learning features, which aim to capture the inherent essence and nuanced characteristics of the video content.

2.2. Multi-modal deep learning based prediction model

Several scholars have tackled multi-modal deep learning-based popularity prediction, particularly focusing on predicting the popularity of content encompassing both text and images. For instance, Said et al. (2020) undertook the prediction of image post popularity, leveraging visual features like visual content and aesthetic quality, alongside meta-information such as user details, post metadata, and temporal aspects. They proposed the Visual-Social CNN (VSCNN), a convolutional neural network-based multi-modal approach. Their results showcased notably high performance compared to state-of-the-art models in predicting image popularity. Similarly, Zhang et al. (2018) introduced the User-guided Hierarchical Attention Network (UHAN) to forecast the popularity of image posts. This model employed a hierarchical attention mechanism for both visual and textual features, enabling the learning of effective representations for multi-modalities.

On the other hand, various studies have delved into understanding the popularity of video posts across social media platforms. Bielski and Trzcinski (2018) emphasized the importance of not solely achieving accuracy in predicting the popularity of social media videos but also comprehending how components within each modality influence the final popularity score. To address these objectives, they proposed a method integrating BiLSTM and the Self-Attention mechanism. Their model generates spatio-temporal heat maps derived from images and video frames. Moreover, Sarkar et al. (2023) focused on predicting the saturation point of video views by considering four video attributes—thumbnail, title, audio, and the video content itself—as inputs for their model. In another context, Xie et al. (2020) introduced a multi-modal variational encoder-decoder (MMVED) framework to account for uncertainty factors such as diverse user interests and complex online interactions in predicting the popularity of micro-videos on *Xigua*, a prominent video-sharing platform in China. Their framework leveraged various modalities for each micro-video, encompassing visual, acoustic, textual, and social features. These micro-

LSTM network.

Several research utilized solely the visual features of videos in their popularity prediction models (Zohourian et al., 2018; Bielski and Trzcinski, 2018; Xie et al., 2020), which limits their scope to considering only the visual attributes for predicting popularity, overlooking other intrinsic video features. Conversely, works by Sarkar et al. (2023) and Said et al. (2020) integrated video frames to encapsulate inherent video characteristics. However, these studies primarily focused on relatively longer videos, restricting their analysis to the initial frames, and potentially failing to capture the essence of the entire video context.

In contrast, our research concentrates on short videos, aiming to capture comprehensive features throughout the entire video duration. Our proposed model seeks to enhance the performance of popularity prediction by representing the entirety of the video content as a deep learning feature.

2.3. Popularity prediction with popularity score

Previous studies have employed diverse metrics as popularity scores to measure content popularity (Kim et al., 2023). For instance, Khosla et al. (2014) determined popularity scores based on the number of views for Flickr images. Similarly, Zohourian et al. (2018) utilized the number of likes and followers on Instagram to predict the popularity of both images and videos. In addition, Said et al. (2020) considered factors such as the number of views and the duration since the image first appeared on Flickr. Moreover, Bielski and Trzcinski (2018) used metrics like the number of views and followers to define their popularity score. Thus, we propose to utilize popularity scores akin to those detailed in Section 3, drawing inspiration from the metrics employed in these referenced studies.

McParlane et al. (2014) tackled the challenge of predicting image popularity in a cold start scenario, where interaction data is limited. Their focus encompassed incorporating image context, visual appearance, and user context to predict the number of views and comments. Employing the Pareto principle, they established a threshold to delineate 20% of images with high comments and views from the remaining 80% with lower engagement. Their approach was notable for introducing novel context, content, and user features for image prediction, alongside proposing a metric to gauge image popularity. However, their utilization of low-level image features and reliance on statistical methods for defining the popularity standard might limit the representation of distribution in real-world scenarios.

popularity prediction endeavor. They utilized various regression and classification methods with an Instagram image/video dataset to forecast post popularity. Extracting 25 features from YouTube videos and capturing context features from both images and videos, they classified popularity into High, Medium, and Low classes by sorting popularity scores in ascending order and visualizing them (Zohourian et al., 2018). Their study achieved remarkable performance with an RMSE of 0.002 in Popularity Score prediction and accuracy of 90.77% in Popularity Class prediction. However, the labeling method relying on sorted popularity scores might involve subjective judgment and could pose challenges in generalizing the approach to different datasets. Thus, our research endeavors to contribute practical approaches for evaluating popularity, aiming for broader applicability in real-world scenarios.

3. Data and popularity standard

Considering the absence of publicly available datasets tailored for short-form videos, we employed the *YouTube* Data API to curate our dataset. This dataset encompasses comprehensive details regarding both the video content itself and the associated channel information. Our methodology for data collection is extensively elucidated in Section 3.2, offering a meticulous breakdown of our approach.

Furthermore, to assess and quantify popularity within this dataset, we proposed a novel popularity standard based on the Cumulative Distribution Function (CDF) approach. This method serves as our benchmark for evaluating the level of popularity attained by the content. Applying this CDF-based standard, we meticulously annotated our collected dataset, enabling a clear classification of content as popular or otherwise.

3.1. Data collection

To access and gather Shorts video content along with associated meta-information from YouTube, we utilize a *YouTube* Data API key obtained through the Google Developers Console (Youtube data api v3, 2023). The YouTube Data API offers a default daily quota of 10,000 units and provides a versatile array of functions. Among these functions, we specifically opt for functionalities like a Channels list and Videos list to search for videos by keyword and collate pertinent information regarding both videos and channels.

Given that creators typically tag their short-form videos with #shorts upon upload, we employ the keyword #shorts as a filter to search for short-form content. In refining our search results, we filter out channels that source external content and exclude channels primarily focused on commercials or movie promotions, as these might disrupt the training of our model.

tailoring our dataset to this specific region. This deliberate choice aligns with our research objective of predicting the popularity of YouTube Shorts, aiming to minimize cultural variations and ensure a more focused dataset. Additionally, to account for the temporal aspect of video popularity, we meticulously record the date of data collection, acknowledging that view and like counts of YouTube videos tend to increase over time.

We collected an impressive corpus of 13,011 individual content pieces in *Youtube*. We utilized 'pytube,' a Python library adept at downloading *YouTube* videos by utilizing the video IDs obtained from the extracted data.

For a visual representation of the specific data extracted during the crawl from YouTube Shorts, refer to Fig. 1, while serves as an illustrative example, highlighting the nature of the data acquired from these short-form videos.

Download: Download high-res image (323KB)

Download: Download full-size image

Fig. 1. Example of a YouTube Shorts. Each Shorts contains variable information, such as video, title, description, and metadata. We crawled these features to construct the dataset.

3.2. Data description

Shorts metadata, channel metadata, and additional data. First, Shorts metadata encompasses various elements such as video ID, thumbnail URL, video publish date, title, description, category ID, likes count, and comments count. The video ID serves as a distinct identifier for each Short, while the thumbnail URL provides access to the visual representation of the Short. The video's published date records its release, while the title, description, category ID, and tags offer insights into its content and topic. Moreover, views count, likes count, and comments count furnish information regarding its popularity and user interaction. Second, channel metadata comprises channel-specific information, including the channel ID, channel title, subscriber count, total view count, and total video count, all of which are unique to each channel. Last, the additional data section includes essential details such as the collection date, views per day, popularity score, and popularity, providing supplemental insights into the dataset.

Table 1. Detailed description of collected data.

	Type		
Name	Shorts Metadata	Channel Metadata	Additional Data
	Video Id	Channel Id	Collect Date
	Thumbnail Url	Channel Title	Views per day
	Published At	Subscriber Count	Popularity Score
	Title	Total View Count	Popularity
	Description	Total Video Count	
	Category Id		
	Views Count		
	Likes Count		
	Comments Count		

3.3. Popularity standard

While users typically choose and watch original *YouTube* videos actively, *YouTube Shorts* predominantly rely on platform recommendations for user visibility. Moreover, due to their continuous vertical format, short-form videos are often exposed to users, even if users have not actively sought them out.

form videos. This proposed popularity standard serves as a pivotal metric for analyzing and predicting the popularity trends within YouTube Shorts. To achieve this, we establish an effective metric, namely the popularity score, employing the Cumulative Distribution Function (CDF) as a defining measure.

3.3.1. Popularity score

Prior research utilized a popularity score as a metric to assess content popularity (Khosla et al., 2014; Zohourian et al., 2018; Said et al., 2020; Bielski and Trzcinski, 2018). In our experimental dataset, the metric employed aligns with the number of views as an indicator of popularity. However, as the number of views for YouTube Shorts is an accumulation that can be influenced by time, we introduce a refined popularity score represented by the average number of views per day, as depicted in equation (1).

$$\text{Views per day} = \frac{\text{Views Count}}{\text{Collect Date} - \text{Published Date}} \tag{1}$$

The popularity score is formulated based on the average daily views, augmented by an additional unit to accommodate videos with zero views. Previous research commonly employed normalization processes integrating the channel's follower count to mitigate biases associated with the presumption that higher follower counts equate to increased views irrespective of content quality, often using log normalization methods (Khosla et al., 2014; Zohourian et al., 2018; Said et al., 2020; Bielski and Trzcinski, 2018). However, these conventional normalization techniques face limitations in adapting to real-world distributions, especially when the number of popular Shorts significantly outweighs the number of less popular ones. To address this, we opt for a Cumulative Distribution Function (CDF) approach, introducing a Min-Max scaler instead of the typical logarithmic normalization. This ensures a more reasonable and adaptable standard for defining the popularity score, outlined as follows:

$$X_i = \frac{Viewsperday_i + 1}{SubscriberCount_i} \tag{2}$$

$$\text{Popularity Score}_i = \frac{X_i - min(X_i)}{max(X_i) - min(X_i)} \tag{3}$$

Then, we conduct a comprehensive analysis of the popularity score distribution to identify and remove outliers that surpass a threshold of 0.2 within the dataset. Upon this outlier removal process, the total dataset size is refined to 13,001 entries, ensuring a more focused and reliable dataset for subsequent analyses.

3.3.2. Cumulative distribution function

pertinent to hypothesis testing (Van Muiblegt, 2018). Drawing inspiration from a previous study on Internet Protocol Television (IPTV) that effectively employed CDF for channel popularity analysis (Qiu et al., 2009), we adopt this method to visualize data distribution and unveil inherent patterns within our dataset.

In our application of CDF, we utilize it to accurately delineate popular Shorts content. Fig. 2 showcases exemplar CDF curves plotted to analyze popularity distribution. We establish the skewness criterion for popularity, identifying the point at which the slope of the CDF curve reaches 1. Significantly, our findings reveal that the top 15% of Shorts content encompasses over 85% of a Short's popularity score.

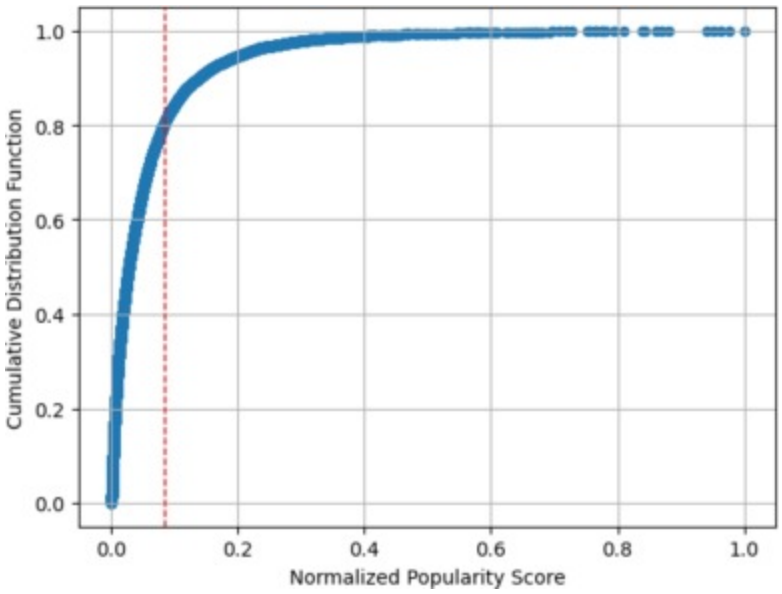

Download: Download high-res image (58KB)

Download: Download full-size image

Fig. 2. A cumulative distribution function (CDF) plot of the normalized popularity score. The red line marks the point on the CDF graph where the slope is one.

4. Method

We present our approach to feature extraction, specifically designed to effectively process various types of information from different modalities for predicting the popularity of YouTube Shorts. Furthermore, we detail the construction of a multi-modal model leveraging these extracted features. The comprehensive structure of the proposed model, along with its architectural design, is visually presented in Fig. 3.

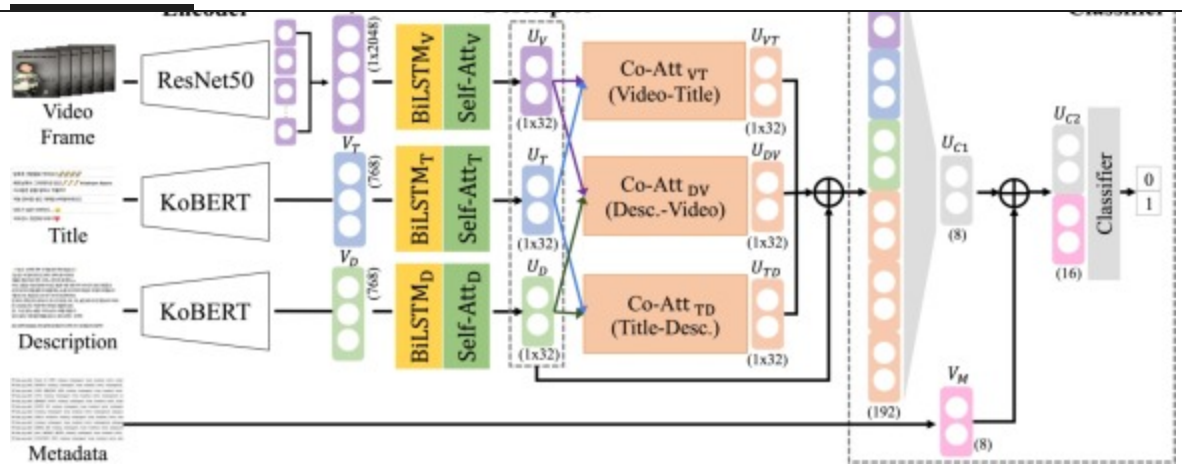

Download: Download high-res image (176KB)

Download: Download full-size image

Fig. 3. The overview of Attention-based Multi-modal Popularity prediction of Short-form videos Model (AMPS). V_T denotes the title feature, V_D represents the description feature, and V_M indicates the metadata feature. U_V, U_T, and U_D symbolize the feature descriptors for the video, title, and description, respectively. The Bidirectional LSTM with Self-Attention layer is abbreviated as BiLSTM and Self-Att, whereas the Co-Attention layer is referred to as Co-ATT. U_{VT}, U_{DV}, and U_{TD} are the outcome vectors of the Co-Attention layer for the video-title, video-description, and title-description feature descriptors, respectively. U_{C1} is the vector where the first Merged layer's 192-dimensional vector is downsized to 8 dimensions, and U_{C2} signifies a 16-dimensional vector merged with V_M.

4.1. Feature extraction

We present an outline detailing the extraction process of information from multi-modal data sources, including video, text, and metadata. The feature extraction proceeded through the following sequential steps.

4.1.1. Video feature

We extract the video feature from a series of video frames, where each frame undergoes resizing to dimensions of 224×224 before entering the encoder. For feature extraction, we employ the pre-trained ResNet50 model, an extended version of the Deep Residual Neural Network (ResNet) (He et al., 2016). From ResNet50's second connected layer, we extract an image representation, resulting in a 2048-dimensional feature vector for each frame (Ji et al., 2023).

one minute, we opt to leverage information from all frames to generate the video feature vector. Consequently, the final video embedding is derived by computing the average vector from all frames, serving as a comprehensive representation of the video.

4.1.2. Text feature

Our feature extraction from titles, crucial elements representing YouTube Shorts, extends to the descriptive text accompanying them, comprising brief descriptions and details. Titles and descriptions encompass sequences of words of varying lengths. Leveraging the sentence2vector function of Bidirectional Encoder Representations from Transformers (BERT) (Kenton and Toutanova, 2019), we extract features corresponding to both the title and description.

BERT, renowned for its proficiency in natural language processing tasks, offers an ideal framework for generating feature vectors from textual data. Its prowess in comprehending semantic meanings and capturing contextual information empowers us to effectively represent and analyze key aspects embedded within Shorts' titles and descriptions.

4.1.3. Metadata feature

We selected a set of metadata features, comprising four related to channel information and four related to Shorts information, as these have showcased significant performance enhancements in prior studies (Abousaleh et al., 2021; Meghawat et al., 2018; Li et al., 2016; Vasireddi et al., 2023).

First, within Channel Metadata, the popularity of a channel strongly correlates with the popularity of its uploaded Shorts. Hence, we've integrated a set of channel-related metadata, ensuring uniform values for every Shorts uploaded by the same channel. Second, in Video Metadata, prior research emphasizes the influence of contextual content information on its popularity (Abousaleh et al., 2021). Prior research demonstrated the increased appearance of tagged content in search results (Kato et al., 2008), while others like (Jani et al., 2022) highlighted the significance of effective titles and comprehensive content details in affecting popularity.

To ensure uniform scaling and diminish the impact of outliers across all metadata, we normalize the data using a Robust Scaler (de Amorim et al., 2023), ensuring a more consistent and balanced dataset.

- **Channel Metadata**

- Total views: The combined views of all the Shorts on a channel.
- Total videos: The total number of Shorts that the channel has uploaded.
- Average views: The average number of views a channel's Shorts, which is divided by total Shorts by total views.

- **Video Metadata**
  - Video length: The length of each video is no longer than one minute.
  - Tag count: The number of tags ascribed by a user who uploaded the Shorts.
  - Title length: The number of characters in the title of a Shorts.
  - Description length: The number of characters in the description of a Shorts.

4.2. YouTube Shorts popularity prediction networks overview

We introduce the framework of the Attention-based Multi-modal popularity prediction model for Short-form videos Model (AMPS). We begin with a succinct overview of the model's structure, followed by a comprehensive breakdown depicted in detail in Fig. 3. Our model is designed with four inputs: Video Frame, Title, Description, and Metadata. Three of these inputs—Video Frame, Title, and Description—are vectorized through an encoder. Consequently, the Video Frame feature vector is represented in 2048 dimensions as V_V, while the feature vectors for Title (V_T) and Description (V_D) are each represented in 768 dimensions.

Subsequently, these vectors are transformed into feature descriptors (*i.e.*, U_V, U_T, U_D) via BiLSTM with Self-Attention layers. These descriptors then undergo pairs of Co-Attention layers: Video and Title ($Co\text{-}Att_{VT}$), Description and Video ($Co\text{-}Att_{DV}$), and Title and Description ($Co\text{-}Att_{TD}$). The outputs of each Co-Attention layer, alongside the Feature descriptors U_V, U_T, and U_D, are expressed in 32 dimensions each.

The amalgamation of BiLSTM with Self-Attention layers and Co-Attention layers forms a robust approach for comprehending and predicting the popularity of YouTube Shorts. This fusion

fostering more precise and insightful popularity predictions. AMPS culminates in the integration of two merged layers, culminating in a comprehensive predictive framework.

The initial merged layer combines vectors from the co-attention layer and feature descriptors, consolidating them into a fully connected layer that yields an 8-dimensional vector U_{C1}. Subsequently, the second merged layer incorporates the metadata feature vector (V_M) with the output vector from the first merged layer, resulting in U_{C2}. This sequential process culminates in the classifier layer, facilitating binary classification to differentiate between popular and unpopular *YouTube Shorts* videos.

4.3. Detail of the YouTube Shorts popularity prediction network

4.3.1. Preparation of training data

The application of the CDF-based popularity standard to the *YouTube Shorts* dataset revealed an imbalance, with a distribution ratio of 15:85 between popular and non-popular videos. Such an imbalance can lead to biased model outcomes, particularly for minority classes, impacting overall model performance. To address this imbalance, we employed the Synthetic Minority Oversampling Technique (SMOTE) strategy. SMOTE is an oversampling strategy that synthesizes samples for the minority class based on the k-nearest neighbors principle (Chawla et al., 2002). Through SMOTE, the training set's classes were balanced to achieve an equal ratio, fostering a more equitable learning process. This strategic approach significantly contributed to enhancing our model's overall performance.

Each sample in the dataset is associated with four inputs: video, title, description, and metadata. As described in Section 4.1, these inputs undergo feature vector extraction facilitated by specific encoders. The video frame undergoes representation in 2048 dimensions via the ResNet50 encoder, culminating in the video feature vector V_V. The title and description are transformed into 768-dimensional feature vectors utilizing the KoBERT encoder (V_T, V_D). The metadata, consisting of channel and video metadata as mentioned in Section 4.1.3, is condensed into an 8-dimensional feature vector V_M.

4.3.2. BiLSTM with the self-attention mechanism

Drawing inspiration from Bielski and Trzcinski (2018), we introduced a self-attention mechanism into our approach for both video and text features. Self-attention empowers the model to discern the relative significance of each feature within the input sequence, enabling a selective focus on pivotal features (Lee and Park, 2024). Notably, recent advancements in other

2023; Gedamu et al., 2023).

In addition to self-attention, we integrated Bidirectional-Long Short-Term Memory (BiLSTM) to effectively capture long-term dependencies within our video and text data. BiLSTM extends LSTM models by employing two LSTM layers—one to process input in the forward direction and another for input in the backward direction (Siami-Namini et al., 2019). This architecture empowers the model's comprehension of sequential information by considering both past and future contexts, thereby demonstrating success across various natural language processing tasks (Hameed et al., 2019).

Based on the findings of the Caption Generation model by S. et al. (2022), it is highlighted that typical BiLSTM architectures can struggle to identify salient features based on specific contextual information. To address this and closely capture sequential features aligned with contextual cues, S. et al. (2022) integrated a self-attention mechanism with BiLSTM. This approach resonates with recent successful studies that have combined attention mechanisms and BiLSTM to enhance model performance (Qiu et al., 2022; Xie et al., 2019).

Following this approach, we integrated BiLSTM and self-attention mechanisms into our model to bolster feature extraction. As depicted in Fig. 4, the input vectors traverse through the BiLSTM layer, generating hidden vectors via two bidirectional LSTM layers. These hidden vectors are then transformed into feature descriptors using the self-attention layer.

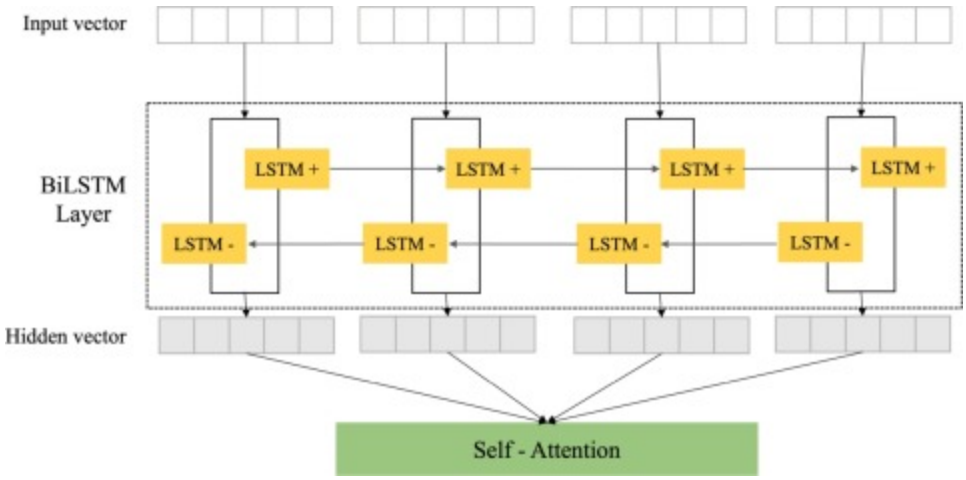

Download: Download high-res image (80KB)

Download: Download full-size image

Fig. 4. The architecture of BiLSTM with the Self-Attention mechanism.

Moreover, as presented in Fig. 3, V_V, V_T, and V_D undergo individual BiLSTM with self-attention layers, producing corresponding feature descriptors: U_V, U_T and U_D. Each of these feature

4.3.3. Feature integration with co-attention mechanism

Our model effectively integrates the interaction between different modalities through the incorporation of a co-attention mechanism. Prior studies have showcased the effectiveness of co-attention as a fusion method that discerns the distinct characteristics and significance of each modality. For instance, Zou et al. (2022) proposed a model for recognizing speech emotions, leveraging CNN, BiLSTM, and wav2vec to extract multi-level acoustic information, which they fused using a co-attention mechanism.

Similarly, Ghosal et al. (2018) highlighted that integrating all modalities might not uniformly enhance performance due to their varying roles. To tackle this, they proposed a fusion strategy utilizing a co-attention mechanism to capture inter-modality relationships effectively. Furthermore, Wu et al. (2021) proposed Multi-modal Co-Attention Networks (MCAN), employing a co-attention layer to fuse visual and text features and learn their relationships for fake news detection. Co-attention proves instrumental in creating meaningful representations of inter-modal relationships, elucidating how different data types interact and contribute to overall content understanding. In our model, we build these interconnections by using co-attention across feature descriptors (U_V, U_T and U_D): Video-Title (U_{VT}), Description-Video (U_{DV}) and Title-Description (U_{TD}). Each of these feature vectors is 32-dimensional, capturing the nuanced interactions between distinct modalities.

4.3.4. Merged and classifier

AMPS incorporates two merged layers for its predictive model. The first merged layer combines the 32-dimensional feature descriptors (V_V, V_T and V_D) along with the co-attention-derived result vectors (U_V, U_T and U_D), each representing fused feature descriptors. As a result, the first merged layer generates a 192-dimensional vector, which then undergoes transformation through a fully connected layer, culminating in an 8-dimensional U_{C1} vector. Subsequently, the second merged layer concatenates the 8-dimensional U_{C1} vector with the 8-dimensional metadata feature vector V_M, resulting in a combined 16-dimensional U_{C2} vector. This fused representation encapsulates the amalgamation of both feature descriptors and metadata information. Finally, the model utilizes a softmax layer to classify whether the *Shorts* video is popular or not.

5. Experiments and results

our experiments, including the evaluation metrics employed to gauge our model performance, particularly in handling imbalanced classifications. We introduce the baseline models and additional datasets incorporated for comparison. In the results segment, we compare our model's performance against baseline models and other datasets. Furthermore, we present the findings of an ablation study, highlighting distinctions between modalities and their impact on the model's predictive capacity.

5.1. Experiments

5.1.1. Experimental setup

The dataset is divided randomly into train, validation, and test sets at an 8:1:1 ratio. Upon analyzing our collected YouTube Shorts dataset using the proposed popularity standard, an imbalanced class distribution of 15:85 is observed. To mitigate this imbalance, we apply the Synthetic Minority Oversampling Technique (SMOTE), a strategy widely used to augment data in underrepresented classes, thereby fostering a more balanced learning process for the model (Chawla et al., 2002). In addition, we implement the binary focal cross-entropy loss (Lin et al., 2017), specifically designed to handle imbalanced class distributions. This variant of binary cross-entropy loss diminishes the impact of well-classified examples, effectively addressing class imbalance. The loss function parameters are configured with an alpha of 0.25 and gamma of 2.0. Our model undergoes training for 100 epochs, incorporating early stopping based on the validation loss with a patience level of 10. Generally, convergence is achieved within 20-40 epochs. The optimization leverages the Adam optimizer (Kingma and Ba Adam, 2017), with a learning rate set to 0.0001.

5.1.2. Evaluation metrics

In this study, we utilize a standard set of evaluation metrics to gauge the performance of our model in classification tasks. These metrics, commonly employed in classification assessments, comprise accuracy, precision, recall, and F1-score (Melamed et al., 2003; Goutte and Gaussier, 2005). Here are the formulas for accuracy, precision, recall, and F1-score, where let *tp*, *tn*, *fn*, and *fp* denote true positive, true negative, false negative, and false positive, respectively. All equations for accuracy, precision, recall and F1-score are presented as follows:

$$\text{Accuracy} = \frac{tp + tn}{tp + tn + fp + fn} \tag{4}$$

$$\text{Precision} = \frac{tp}{tp + fp} \tag{5}$$

$$\text{F1-Score} = 2 \times \frac{\text{Precision} \times \text{Recall}}{\text{Precision} + \text{Recall}} \tag{7}$$

The accuracy metric measures the percentage of accurately predicted instances across all classes. However, in cases of imbalanced data, relying solely on accuracy might not be sufficient to evaluate the model's performance. To address this concern, we incorporate additional evaluation metrics: the Geometric Mean (G-Mean) and average F1-score, specifically tailored for assessing classification in highly imbalanced datasets. The G-Mean evaluates the true positive rate and true negative rate in a binary class imbalance scenario. As highlighted in Kuncheva et al. (2018), it serves as a robust benchmark for comprehensively assessing model performance and identifying an optimal classification threshold. The G-Mean formula is represented as follows:

$$\text{G-Mean} = \sqrt{\text{Sensitivity} \times \text{Specificity}} \tag{8}$$

where sensitivity and specificity are the true positive rate ($\frac{tp}{tp+fn}$) and the true negative rate ($\frac{tn}{tn+fp}$), respectively.

5.1.3. Baseline models

In order to demonstrate the performance of the proposed model, we conduct a comparative analysis against four machine learning models (SVC (Evgeniou and Pontil, 1999), SGDClassifier (Kiefer and Wolfowitz, 1952), DecisionTreeClassifier (Rokach and Maimon, 2005), RandomForestClassifier (Abdulsalam et al., 2007)), along with three existing models (Said et al., 2020; Sarkar et al., 2023; Gu, 2020) focusing on multi-modal deep learning tasks in popularity prediction.

VSCNN (Said et al., 2020) was initially crafted to forecast image popularity across social media platforms. It amalgamates diverse visual (Visual CNN) and social (Social CNN) features within its architecture to predict popularity scores. The model extracts both low-level and high-level features from images, leveraging VGG19 for deep learning feature extraction related to visual content analysis. Fourteen social context features, encompassing user details, post metadata, and temporal attributes, are extracted from post information. The model individually integrates visual and social features, reducing their dimensionality to 20 using PCA. The resultant vectors from the convolutional layers of the visual network and the social network are merged to predict popularity through a fusion network. As the popularity score is initially addressed as a regression problem, a tailored binary classification approach based on a proposed popularity standard is employed to determine a video's popularity status. To adapt VSCNN to our dataset, we exclusively apply deep learning features extracted from videos to the Visual Content

to its superior performance over VGG19 in this context. The Social Context Features are customized by incorporating metadata specific to our dataset. Given our binary classification task, we utilize SMOTE to handle imbalanced data and employ a binary focal cross-entropy optimizer.

ViViD (Sarkar et al., 2023) was originally devised to predict a video's total view count at saturation. In our investigation, we explored its adaptability to our dataset by utilizing the video's thumbnail, title, audio, and the video itself as inputs to estimate video view counts. The model follows a hierarchical fusion approach within a deep neural network, initially combining video and audio, followed by merging title and thumbnail features, and finally, integrating these two sets of features. In our adaptation, we merged the video and title features exclusively, considering the absence of corresponding input features for audio and thumbnails within our dataset. Similar to our research methodology, titles were represented using BERT embeddings. For video representation, we captured information from the first 30 video frames, expressed in RGB with three channels. Due to computational limitations, our experiments involved feature extraction from only 10 frames of video data.

MMSPP (Gu, 2020) is a model initially designed for forecasting Twitter post popularity, gauged through Retweet and Favorite counts. Their approach involves two multi-modal fusion strategies. The first strategy entails pre-training text and image models using Long Short-Term Memory (LSTM) with attention mechanisms and Convolutional Neural Network (CNN). The second approach employs an attention block on both text and image features, followed by a Hadamard product operation to obtain fused vectors. These models are then amalgamated with social features of authors, such as follower count and account age, demonstrating state-of-the-art performance on a Twitter dataset. In our experiments, we focused on the second strategy model. To tailor our dataset for this model, we replaced social features with the metadata features previously discussed. We considered a single frame extracted from the video as an image representation. Unlike MMSPP, which used VGG16 for image feature extraction, we opted for the ResNet50 model due to its superior performance in our context.

We employed a concatenated set of features derived from encoding the modalities of video, title, description, and metadata, which were extracted in our study, for the machine learning models.

5.1.4. Comparative datasets

To assess the performance of our model, we conducted experiments using two datasets.

utilized in a competition aimed at predicting the popularity of photos circulated on social media platforms. Popularity is gauged by a score normalized against cumulative views over a 30-day period. The dataset encompasses a total of 20,337 items. To align with our proposed popularity prediction standard, we define 'popularity' by normalizing the sum of popularity scores over this 30-day duration, thereby denoting images as 'popular.' This leads to a dataset where 40% of the images are considered popular, offering a balanced distribution, unlike our study's dataset. Evaluation metrics for this dataset include accuracy, precision, recall, and F1-score. Notably, oversampling techniques are not applied in this dataset. The dataset incorporates images, titles, image descriptions, and metadata. The metadata encompasses user-related details like GroupsCount, PhotoCount, and MeanViews, along with image metadata such as size, tag count, title length, and description length. Despite our model being tailored for video popularity prediction, the feature dimensions for videos and images are consistent. Consequently, we extracted features from this dataset that are congruent with our study's requirements.

Social Media Prediction Dataset (SMPD) (Wu et al., 2019) is an extensive multi-modal dataset containing a diverse range of social media posts, totaling 486k entries. Across 756 categories, our specific focus revolves around the 'Social & People' category, representing a significant portion of our dataset, amounting to 23,351 entries, of which 15,121 are accessible for our experiments. This dataset incorporates images, titles, and metadata, utilizing user-related metadata such as Photo Count and image metadata such as Tag count. In our context of predicting popularity aligned with our proposed standard, we leverage the popularity scores provided within the dataset to define 'popularity.' As a result, we establish a balanced dataset with 40% of the images classified as popular. To assess model performance, we rely on metrics including accuracy, precision, recall, and F1-score.

5.2. Results

5.2.1. Comparison with baseline models

The performance comparison between our proposed method and the baseline models is presented in Table 2. We evaluated the effectiveness of popularity prediction specifically on our dataset (*YouTube Shorts*).

Table 2. Results of popularity classification on our dataset.

	Precision	Recall	F1	Precision	Recall	F1		Mean	F1		(se
VSCNN (Said et al., 2020)	0.834	**0.891**	0.862	0.266	0.181	0.215	0.765	0.402	0.746	2,390,514	28.
ViViD (Sarkar et al., 2023)	0.875	0.857	0.866	0.224	0.253	0.238	0.773	0.466	0.778	977,113	595
MMSPP (Gu, 2020)	0.881	0.825	0.852	0.315	0.419	0.360	0.763	0.588	0.772	813,685	20.
SVC (Evgeniou and Pontil, 1999)	0.882	0.797	0.837	0.302	0.453	0.362	0.741	0.601	0.760	24,414,825	618
DTC (Rokach and Maimon, 2005)	0.863	0.779	0.819	0.252	0.377	0.302	0.712	0.542	0.733	7,482,136	174
SGD (Kiefer and Wolfowitz, 1952)	0.920	0.688	0.787	0.307	**0.698**	0.426	0.689	0.693	0.727	3,593	10.
RFC (Abdulsalam et al., 2007)	0.888	0.776	0.828	0.310	0.507	0.384	0.732	0.627	0.755	-	12.
AMPS (Ours)	**0.919**	0.832	**0.873**	**0.405**	0.610	**0.486**	**0.797**	**0.712**	**0.812**	799,357	91.

Overall, AMPS consistently outperformed the other models across various metrics, including precision, recall, F1-score, accuracy, G-Mean, and average F1-score. Notably, in G-Mean—a crucial metric for evaluating classification models on imbalanced datasets—AMPS showcased a notable improvement of 2% to 13%, and in average F1-score, an enhancement of 4% to 9%. Among the machine learning models, SVC achieved the highest accuracy at 74.1% and averaged 76% on F1-score. Conversely, SGD attained the highest G-Mean at 69.3%. However, VSCNN and MMSPP models struggled to extract meaningful information or efficiently fuse inter-modal and intra-

accuracy, G-Mean, and average F1-score. The findings suggested that utilizing features from the entire frame set of a video, rather than a subset of frames, was more effective. Conversely, our model, AMPS, excelled in extracting informative features for popularity prediction from the dataset and effectively integrating these features' relationships, resulting in a robust overall performance. Thus, our proposed AMPS model, in conjunction with the popularity standard, demonstrated highly effective performance.

5.2.2. Comparison with comparative datasets

In this study, we extended our evaluation of the multi-modal popularity prediction model, AMPS, to include two additional datasets: IPPCD and SMPD. Similar to our previous approach, we compared AMPS against several baseline models, including VSCNN, ViViD, MMSPP, SVC, DTC, SGD, and RFC. The results of these comparisons on both datasets are summarized in Table 3 and Table 4.

Table 3. Results of comparison with comparative datasets (IPPCD).

Model	Non-Popular Class			Popular Class			Accuracy
	Precision	Recall	F1	Precision	Recall	F1	
VSCNN (Said et al., 2020)	0.750	0.788	**0.769**	**0.777**	0.738	0.757	0.763
ViViD (Sarkar et al., 2023)	0.574	0.593	0.583	0.611	0.592	0.601	0.592
MMSPP (Gu, 2020)	0.844	0.630	0.722	0.709	0.886	0.788	0.759
SVC (Evgeniou and Pontil, 1999)	0.563	0.479	0.518	0.547	0.629	0.585	0.554
DTC (Rokach and Maimon, 2005)	0.744	0.742	0.743	0.743	0.745	0.744	0.743
SGD (Kiefer and Wolfowitz, 1952)	0.720	0.745	0.732	0.737	0.711	0.724	0.728
RFC (Abdulsalam et al., 2007)	0.764	0.646	0.700	0.694	0.801	0.743	0.723
AMPS (Ours)	**0.876**	0.655	0.749	0.725	**0.908**	**0.806**	**0.781**

Table 4. Results of comparison with comparative dataset (SMPD).

	Precision	Recall	F1	Precision	Recall	F1	
VSCNN (Said et al., 2020)	0.573	0.730	0.642	0.537	0.365	0.435	0.562
ViViD (Sarkar et al., 2023)	0.762	0.691	0.725	0.666	0.741	0.701	0.714
MMSPP (Gu, 2020)	0.690	0.779	0.732	0.711	0.608	0.656	0.698
SVC (Evgeniou and Pontil, 1999)	0.765	0.781	0.773	0.725	0.706	0.715	0.747
DTC (Rokach and Maimon, 2005)	0.615	0.738	0.671	0.644	0.508	0.568	0.626
SGD (Kiefer and Wolfowitz, 1952)	0.717	0.761	0.738	0.726	0.679	0.702	0.721
RFC (Abdulsalam et al., 2007)	0.554	0.996	0.712	0.972	0.142	0.248	0.583
AMPS (Ours)	**0.763**	**0.833**	**0.797**	0.766	0.680	**0.721**	**0.765**

Analyzing the IPPCD dataset results, AMPS showcased superior performance, achieving the highest accuracy at 78.1%. Notably, it displayed a substantial 2% to 22% improvement in the exceptional F1-score for the popular class, emphasizing its proficiency in identifying popular content on Instagram. Conversely, models like SVC and ViViD exhibited lower overall performance, with ViViD particularly struggling in both precision and recall metrics. Moving to the SMPD dataset, AMPS again led the performance charts with an accuracy of 76.5%. It demonstrated strength in both non-popular and popular classes, highlighting its robustness across varied types of social media content. In contrast, models like VSCNN and DTC showed notably lower results, trailing behind AMPS significantly, especially in accuracy and F1 scores. Consistent superior performance across diverse datasets, including IPPCD and SMPD, further affirms the robustness and versatility of our constructed dataset from *YouTube Shorts*. This substantiates its effectiveness in predicting content popularity.

5.2.3. Ablation study

To assess the impact of architectural elements in AMPS, we conducted an ablation study focusing on two crucial components: the BiLSTM with Self-Attention mechanism and the Co-Attention mechanism. The findings, presented in Table 5, compared the full AMPS model against variants employing different combinations of dense layers, BiLSTM with Self-Attention, and Co-Attention layers. The variants ‘Dense and Concat’ utilized only dense layers for feature combination, ‘BiLSTM-SelfAtt and Concat’ integrated BiLSTM-SelfAttention layers, and ‘Dense and CoAtt’ implemented dense layers wit Co-Attentions.

Model	Non-Popular Class			Popular Class			Accuracy	G-Mean	Avg-F1
	Precision	Recall	F1	Precision	Recall	F1			
Dense and Concat	0.922	0.653	0.764	0.241	0.665	0.354	0.655	0.659	0.706
BiLSTM-SelfAtt and Concat	0.916	0.794	0.851	0.311	0.562	0.401	0.761	0.668	0.787
Dense and CoAtt	**0.925**	0.599	0.727	0.227	**0.708**	0.343	0.615	0.651	0.673
AMPS (Ours)	0.919	**0.832**	**0.873**	**0.405**	0.610	**0.486**	**0.797**	**0.712**	**0.812**

The results underscored the efficacy of both the BiLSTM-SelfAttention and Co-Attention mechanisms within the AMPS. The AMPS variant outperformeed other configurations across all metrics for both the Non-Popular and Popular classes, achieving the highest accuracy at 79.7%, G-Mean at 71.2%, and average F1-score at 81.2%. Conversely, the 'Dense and Concat' and 'Dense and CoAtt' configurations displayed reduced performance. This ablation study elucidates the pivotal roles played by the BiLSTM-SelfAttention and Co-Attention mechanisms in effectively capturing relationships within our model.

We also investigated the impact of different modalities on the predictive efficacy of our AMPS concerning YouTube Shorts' popularity. This involved evaluating the model performance using individual modalities (Video, Text, and Metadata), and their combinations, as presented in Table 6. Both 'Video and Metadata' and 'Video and Text' configurations exhibited notable enhancements compared to single-modality setups. However, their performance was eclipsed by the full AMPS model, which incorporates all modalities. AMPS showcased superior performance across precision, recall, F1 score, accuracy, G-Mean, and average F1 score for the Popular class. These outcomes underscored the significance of fusing video, text, and metadata modalities for predicting YouTube Shorts' popularity. This solidified the necessity of a multi-modal approach to comprehensively understanding and predicting content popularity.

Table 6. Results of ablation study on modalities.

Modality	Non-Popular Class			Popular Class			Accuracy	G-Mean	Imb-F1
	Precision	Recall	F1	Precision	Recall	F1			
Video	0.919	0.710	0.801	0.263	0.622	0.369	0.698	0.664	0.740

	Precision	Recall	F1	Precision	Recall	F1			
Text (Title and Desc.)	0.923	0.683	0.789	0.269	0.703	0.389	0.686	0.693	0.732
Metadata	**0.928**	0.564	0.702	0.219	**0.735**	0.337	0.588	0.644	0.650
Video and Text	0.920	0.777	0.842	0.306	0.595	0.404	0.751	0.680	0.780
Video and Metadata	0.918	0.788	0.848	0.310	0.573	0.402	0.758	0.672	0.785
AMPS (Ours)	0.919	**0.832**	**0.873**	**0.405**	0.610	**0.486**	**0.797**	**0.712**	**0.812**

5.2.4. Predicting cases

Fig. 5 presents four prediction instances involving videos from two channels in the YouTube Shorts dataset, with predictions made by AMPS regarding their popularity. These instances encompass two accurately predicted cases and two inaccurately predicted ones. Specifically, our focus was on examining the cases where predictions deviated from the actual outcomes, depicted in Fig. 6. The first case involved a video that achieved popularity despite being predicted as not popular. This video's surge in popularity stemmed from a collaboration with a celebrity, where the synergy between the celebrity and the video's main character significantly contributed to its fame. Such collaborations often draw increased attention owing to the celebrity's fan base and recognition. If our model overlooked this social influence, it might have inaccurately predicted the video's popularity. Furthermore, the model's reliance solely on views as a popularity metric might have disregarded factors like comments and associated interactions, potentially leading to misprediction.

Download: Download high-res image (316KB)

Download: Download full-size image

Fig. 5. Prediction results of four cases. Success cases involve accurately predicting Shorts as either unpopular or popular. Failure cases include incorrectly predicting popular Shorts as unpopular, and unpopular items as popular.

Download: Download high-res image (154KB)

Download: Download full-size image

Fig. 6. Several failure prediction cases.

reality. This video primarily comprised advertising material, distinct from typical content that gains popularity through organic user interactions. Advertising content often generates fewer user interactions or may provoke artificial engagements. The model's inability to discern this distinction might have led to the inaccurate prediction, as it relied on video content, text, and limited metadata. Additionally, users commonly exhibit a tendency to mentally filter out advertisements they encounter, known as 'ad blindness.' The model might have failed to recognize this behavior, contributing to its inaccurate prediction (Li and Huang, 2016).

6. Discussion and concluding remarks

The significance of short-form videos across diverse industries and their market scalability underscores the importance of research in predicting their popularity. However, several recent research encountered notable challenges attributed to various factors. First, there exists a scarcity of short-form video datasets within social media content. Second, a misalignment persists between prevailing popularity criteria and actual real-world scenarios.

Our paper introduces three pivotal contributions that address these challenges comprehensively. First, in response to the need highlighted in the second research question, we curated and presented a comprehensive dataset sourced from *YouTube Shorts*. This dataset stands as a valuable resource facilitating deeper comprehension and analysis of short-form videos (related to RQ2). Second, we proposed a novel CDF-based popularity standard specifically tailored to real-world scenarios. The efficacy of this standard is validated by the exceptional performance of the AMPS model across diverse datasets, including IPPCD and SMPD. This validation emphasizes the practical applicability and real-world effectiveness of our innovative standard (related to RQ1). In addition, our investigation of the third research question involves the introduction of the AMPS. This model seamlessly incorporates BiLSTM alongside Self-Attention and Co-Attention Mechanisms. This integration empowers the effective comprehension of sequential information within individual modalities (intra-relationships) and the robust capturing of inter-modality relationships.

Our ablation study illuminates the substantial performance enhancement derived from employing attention mechanisms within our architecture. Moreover, AMPS capitalizes on full video frame representation. In comparative experiments against other models using metrics such as G-Mean, average F1-score, and Accuracy, our approach consistently outperformed models using only initial frames or single-frame representations. This highlights the superior effectiveness of employing full video frame representation in gauging popularity.

Based on the findings of the current study, we present some managerial implications as follows:

distribution, and marketing investments by utilizing insights derived from the comprehensive dataset and novel popularity standard. This facilitates strategic planning and resource allocation, optimizing the impact of short-form video content on brand visibility and audience engagement.

- Managers can encourage innovation in content creation by embracing advanced models like the AMPS, which facilitate effective comprehension of sequential information and inter-modality relationships. This fosters creativity and differentiation in short-form video content, allowing companies to stand out in a competitive market landscape.

Moreover, we examine several marketing implications as follows:

- Companies operating in industries reliant on short-form video content, such as social media platforms, can utilize comprehensive datasets sourced from platforms like YouTube Shorts for market analysis and audience engagement strategies. This enables them to tailor their content to better resonate with their target audience.
- Marketers can adopt the proposed CDF-based popularity standard to gauge the effectiveness of their short-form video content in real-world scenarios accurately. Aligning popularity metrics with actual consumer preferences enhances marketing strategies, leading to increased engagement and brand awareness.

In summary, our contributions in dataset curation, the novel popularity standard, and the AMPS model represent significant strides in enhancing our understanding and predictive capabilities regarding the popularity of short-form video content.

CRediT authorship contribution statement

Minhwa Cho: Writing – original draft, Methodology, Investigation, Formal analysis, Data curation, Conceptualization. **Dahye Jeong:** Writing – review & editing, Validation, Software, Resources, Project administration. **Eunil Park:** Writing – review & editing, Validation, Supervision, Software, Funding acquisition.

Declaration of Competing Interest

relationships that could have appeared to influence the work reported in this paper.

Acknowledgements

This work was supported by Institute of Information & communications Technology Planning & Evaluation (IITP) grant funded by the Korea government (MSIT) (No. RS-2023-00254129, Graduate School of Metaverse Convergence (Sungkyunkwan University), and No. IITP-2024-2020-0-01816, ICAN Program).

Data availability

We included the link for data share (http://github.com/dxlabskku/AMPS_short-form-popularity ↗).

References

Abdulsalam et al., 2007 H. Abdulsalam, D.B. Skillicorn, P. Martin
Streaming random forests
Proc. of IDEAS '07, IEEE (2007), pp. 225-232
Crossref ↗ View in Scopus ↗ Google Scholar ↗

Abousaleh et al., 2021 F.S. Abousaleh, W.-H. Cheng, N.-H. Yu, Y. Tsao
Multimodal deep learning framework for image popularity prediction on social media
IEEE Trans. Cogn. Dev. Syst., 13 (3) (2021), pp. 679-692, 10.1109/TCDS.2020.3036690 ↗
View in Scopus ↗ Google Scholar ↗

Agrawal and Mittal, 2022 S.R. Agrawal, D. Mittal
Optimizing customer engagement content strategy in retail and e-tail: available on online product review videos
J. Retail. Consum. Serv., 67 (2022), Article 102966
View PDF View article View in Scopus ↗ Google Scholar ↗

Arora et al., 2019 A. Arora, S. Bansal, C. Kandpal, R. Aswani, Y. Dwivedi
Measuring social media influencer index-insights from Facebook, Twitter and Instagram
J. Retail. Consum. Serv., 49 (2019), pp. 86-101
View PDF View article View in Scopus ↗ Google Scholar ↗

TikTok consumption and university student engagement in virtual classrooms in Egypt

Ubiquitous Learning Int. J., 17 (2023), pp. 1-16, 10.18848/1835-9795/CGP/v17i01/1-16 ↗

View in Scopus ↗ Google Scholar ↗

Bielski and Trzcinski, 2018 A. Bielski, T. Trzcinski

Understanding multimodal popularity prediction of social media videos with self-attention

IEEE Access, 6 (2018), pp. 74277-74287, 10.1109/ACCESS.2018.2884831 ↗

View in Scopus ↗ Google Scholar ↗

Canella, 2018 G. Canella

Video goes vertical: local news videographers discuss the problems and potential of vertical video

Electronic News, 12 (2) (2018), pp. 75-93, 10.1177/1931243117705417 ↗

View in Scopus ↗ Google Scholar ↗

Chandrasekaran et al., 2019 S. Chandrasekaran, B. Annamalai, S.K. De

Evaluating marketer generated content popularity on brand fan pages–a multilevel modelling approach

Telemat. Inform., 44 (2019), Article 101266

View PDF View article View in Scopus ↗ Google Scholar ↗

Chawla et al., 2002 N.V. Chawla, K.W. Bowyer, L.O. Hall, W.P. Kegelmeyer

Smote: synthetic minority over-sampling technique

J. Artif. Intell. Res., 16 (2002), pp. 321-357

Crossref ↗ View in Scopus ↗ Google Scholar ↗

Contents Korea 2023, 2023 Contents Korea 2023 - 2023 shorts trend analysis

https://contents-korea.com:476/kor/media/notice_cont_view.asp?NUM=219&param=%26page%3D4 ↗, Accessed 11th Dec 2023

Online

Google Scholar ↗

de Amorim et al., 2023 L.B. de Amorim, G.D. Cavalcanti, R.M. Cruz

The choice of scaling technique matters for classification performance

Appl. Soft Comput., 133 (2023), Article 109924

View PDF View article View in Scopus ↗ Google Scholar ↗

Social media use spans almost half global population
Online
https://www.hootsuite.com/newsroom/press-releases/digital-2020-social-media-use-spans-almost-half-global-population ↗ (2023), Accessed 11th Dec 2023
Google Scholar ↗

Ding et al., 2019 K. Ding, K. Ma, S. Wang
Intrinsic image popularity assessment
Proc. of ACM MM '19, MM '19, Association for Computing Machinery, New York, NY, USA (2019), pp. 1979-1987, 10.1145/3343031.3351007 ↗
View in Scopus ↗ Google Scholar ↗

Dolega et al., 2021 L. Dolega, F. Rowe, E. Branagan
Going digital? The impact of social media marketing on retail website traffic, orders and sales
J. Retail. Consum. Serv., 60 (2021), Article 102501
View PDF View article View in Scopus ↗ Google Scholar ↗

Evgeniou and Pontil, 1999 T. Evgeniou, M. Pontil
Support vector machines: theory and applications
Advanced Course on Artificial Intelligence, Springer (1999), pp. 249-257
Google Scholar ↗

Gedamu et al., 2023 K. Gedamu, Y. Ji, L. Gao, Y. Yang, H.T. Shen
Relation-mining self-attention network for skeleton-based human action recognition
Pattern Recognit., 139 (2023), Article 109455, 10.1016/j.patcog.2023.109455 ↗
View PDF View article View in Scopus ↗ Google Scholar ↗

Ghosal et al., 2018 D. Ghosal, M.S. Akhtar, D. Chauhan, S. Poria, A. Ekbal, P. Bhattacharyya
Contextual inter-modal attention for multi-modal sentiment analysis
Proc. of EMNLP '18 (2018), pp. 3454-3466
Crossref ↗ View in Scopus ↗ Google Scholar ↗

Goutte and Gaussier, 2005 C. Goutte, E. Gaussier
A probabilistic interpretation of precision, recall and f-score, with implication for evaluation
Proc. of ECIR '05, Springer (2005), pp. 345-359
Crossref ↗ View in Scopus ↗ Google Scholar ↗

MMSpp: multimodal social media popularity prediction
Proc. of ICDS '20 (2020), pp. 1-5, 10.1109/ICDS50568.2020.9268768 ↗
View in Scopus ↗ Google Scholar ↗

Hameed et al., 2019 Z. Hameed, B. Garcia-Zapirain, I.O. Ruiz
A computationally efficient bilstm based approach for the binary sentiment classification
Proc. of ISSPIT '19 (2019), pp. 1-4, 10.1109/ISSPIT47144.2019.9001781 ↗
Google Scholar ↗

He et al., 2016 K. He, X. Zhang, S. Ren, J. Sun
Deep residual learning for image recognition
Proc. of CVPR '16 (2016), pp. 770-778, 10.1109/CVPR.2016.90 ↗
Google Scholar ↗

Jani et al., 2022 R. Jani, M.S.I. Shanto, B.C. Das, K.M. Hasib
Machine learning-based social media news popularity prediction
International Conference on Hybrid Intelligent Systems, Springer (2022), pp. 714-725
Google Scholar ↗

Ji et al., 2023 H. Ji, C. An, M. Lee, J. Yang, E. Park
Fused deep neural networks for sustainable and computational management of heat-transfer pipeline diagnosis
Dev. Built Environ., 14 (2023), Article 100144
View PDF View article View in Scopus ↗ Google Scholar ↗

Kato et al., 2008 M. Kato, H. Ohshima, S. Oyama, K. Tanaka
Can social tagging improve web image search?
Web Information Systems Engineering-WISE 2008: 9th International Conference, Auckland, New Zealand, September 1-3, 2008. Proceedings 9, Springer (2008)
Google Scholar ↗

Kenton and Toutanova, 2019 J.D.M.-W.C. Kenton, L.K. Toutanova
Bert: pre-training of deep bidirectional transformers for language understanding
Proceedings of NAACL-HLT '19 (2019), pp. 4171-4186
Google Scholar ↗

Khosla et al., 2014 A. Khosla, A. Das Sarma, R. Hamid

Proc. of WWW '14 (2014), pp. 867-876

Crossref ↗ Google Scholar ↗

Kiefer and Wolfowitz, 1952 J. Kiefer, J. Wolfowitz

Stochastic estimation of the maximum of a regression function

Ann. Math. Stat., 23 (3) (1952), pp. 462-466, 10.1214/aoms/1177729392 ↗

Google Scholar ↗

Kim et al., 2023 J. Kim, J. Han, D. Choi

Predicting continuity of online conversations on reddit

Telemat. Inform., 79 (2023), Article 101965

View PDF View article View in Scopus ↗ Google Scholar ↗

Kingma and Ba Adam, 2017 D.P. Kingma, J. Ba

Adam: a method for stochastic optimization

https://arxiv.org/abs/1412.6980 ↗ (2017)

Google Scholar ↗

Kuncheva et al., 2018 L.I. Kuncheva, Á. Arnaiz-González, J.-F. Díez-Pastor, I.A.D. Gunn

Instance selection improves geometric mean accuracy: a study on imbalanced data classification

Prog. Artif. Intell., 8 (2018), pp. 215-228

Google Scholar ↗

Ladhari et al., 2020 R. Ladhari, E. Massa, H. Skandrani

Youtube vloggers' popularity and influence: the roles of homophily, emotional attachment, and expertise

J. Retail. Consum. Serv., 54 (2020), Article 102027

View PDF View article View in Scopus ↗ Google Scholar ↗

Lee and Park, 2024 S. Lee, E. Park

Autocaconet: automatic cartoon colorization network using self-attention gan, segmentation, and color correction

Proceedings of the IEEE/CVF Winter Conference on Applications of Computer Vision (2024), pp. 403-411

Crossref ↗ View in Scopus ↗ Google Scholar ↗

Li et al., 2016 C. Li, J. Liu, S. Ouyang

case study

China Commun., 13 (12) (2016), pp. 216-233, 10.1109/CC.2016.7897546 ↗

View in Scopus ↗ Google Scholar ↗

Li et al., 2023 K. Li, Y. Wang, J. Zhang, P. Gao, G. Song, Y. Liu, H. Li, Y. Qiao

Uniformer: unifying convolution and self-attention for visual recognition

IEEE Trans. Pattern Anal. Mach. Intell., 45 (10) (2023), pp. 12581-12600, 10.1109/TPAMI.2023.3282631 ↗

View in Scopus ↗ Google Scholar ↗

Li and Huang, 2016 W. Li, Z. Huang

The research of influence factors of online behavioral advertising avoidance

Am. J. Ind. Bus. Manag., 06 (2016), pp. 947-957, 10.4236/ajibm.2016.69092 ↗

Google Scholar ↗

Lin et al., 2017 T.-Y. Lin, P. Goyal, R. Girshick, K. He, P. Dollár

Focal loss for dense object detection

Proc. of ICCV '17 (2017), pp. 2980-2988

View in Scopus ↗ Google Scholar ↗

Liu et al., 2017 T. Liu, Y. Zhong, K. Chen

Interdisciplinary study on popularity prediction of social classified hot online events in China

Telemat. Inform., 34 (3) (2017), pp. 755-764

View PDF View article View in Scopus ↗ Google Scholar ↗

McParlane et al., 2014 P.J. McParlane, Y. Moshfeghi, J.M. Jose

“Nobody comes here anymore, it's too crowded”; predicting image popularity on flickr

Proc. of ICMR '14 (2014), pp. 385-391

Crossref ↗ View in Scopus ↗ Google Scholar ↗

Meghawat et al., 2018 M. Meghawat, S. Yadav, D. Mahata, Y. Yin, R.R. Shah, R. Zimmermann

A multimodal approach to predict social media popularity

Proc. of MIPR '18 (2018), pp. 190-195, 10.1109/MIPR.2018.00042 ↗

View in Scopus ↗ Google Scholar ↗

Melamed et al., 2003 I.D. Melamed, R. Green, J.P. Turian

Precision and recall of machine translation

Crossref ↗ View in Scopus ↗ Google Scholar ↗

Mondal et al., 2023 M.K.H. Mondal, S. Chakraborty, N. Jaiswal, N. Nishchal, P. Roy
Comparing the use of short video sharing applications for optimizing user engagement
Proc. of TEMSMET '23 (2023), pp. 1-5, 10.1109/TEMSMET56707.2023.10149964 ↗
Google Scholar ↗

Nguyen and Diederich, 2023 H. Nguyen, M. Diederich
Facilitating knowledge construction in informal learning: a study of tiktok scientific, educational videos
Comput. Educ., 205 (2023), Article 104896, 10.1016/j.compedu.2023.104896 ↗
View PDF View article View in Scopus ↗ Google Scholar ↗

Nisa et al., 2021 M.U. Nisa, D. Mahmood, G. Ahmed, S. Khan, M.A. Mohammed, R. Damaševičius
Optimizing prediction of youtube video popularity using xgboost
Electronics, 10 (23) (2021)
https://doi.org/10.3390/electronics10232962 ↗
Google Scholar ↗

Okazaki and Barwise, 2011 S. Okazaki, P. Barwise
Has the time finally come for the medium of the future?
J. Advert. Res., 51 (2011), pp. 59-71, 10.2501/JAR-51-1-057-071 ↗
View in Scopus ↗ Google Scholar ↗

Ortis et al., 2019a A. Ortis, G.M. Farinella, S. Battiato
Predicting social image popularity dynamics at time zero
IEEE Access, 7 (2019), pp. 171691-171706, 10.1109/ACCESS.2019.2953856 ↗
View in Scopus ↗ Google Scholar ↗

Ortis et al., 2019b A. Ortis, G.M. Farinella, S. Battiato
Prediction of social image popularity dynamics
Image Analysis and Processing–ICIAP 2019: 20th International Conference, Trento, Italy, September 9–13, 2019, Proceedings, Part II 20, Springer (2019), pp. 572-582
Crossref ↗ View in Scopus ↗ Google Scholar ↗

Qiu et al., 2009 T. Qiu, Z. Ge, S. Lee, J. Wang, Q. Zhao, J. Xu
Modeling channel popularity dynamics in a large iptv system
Proc. of SIGMETRICS '09 (2009), pp. 275-286
Google Scholar ↗

Recommendation of knowledge graph convolutional networks based on multilayer bilstm and self-attention
Mob. Inf. Syst. (2022), Article 9761629
Google Scholar ↗

Rokach and Maimon, 2005 L. Rokach, O. Maimon
Decision trees
Data Mining and Knowledge Discovery Handbook, Springer (2005), pp. 165-192
Google Scholar ↗

Rui et al., 2019 L.T. Rui, Z.A. Afif, R.R. Saedudin, A. Mustapha, N. Razali
A regression approach for prediction of youtube views
Bull. Electr. Eng. Informatics, 8 (2019), pp. 1502-1506
View in Scopus ↗ Google Scholar ↗

S. et al., 2022 P. S., P.K. K, J. Kaliappan, S.K. Selvaraj, N. R, B. Molla
Caption generation based on emotions using cspdensenet and bilstm with self-attention
Appl. Comput. Intell. Soft Comput., 2022 (2022), pp. 2756396:1-2756396:13
Google Scholar ↗

Said et al., 2020 F. Said, W.-H. Cheng, N.-H. Yu, Y. Tsao
Multimodal deep learning framework for image popularity prediction on social media
IEEE Trans. Cogn. Dev. Syst. (2020), p. 1, 10.1109/TCDS.2020.3036690 ↗
Google Scholar ↗

Sarkar et al., 2023 S. Sarkar, S. Basu, A. Paul, D. Prasad Mukherjee
Vivid: view prediction of online video through deep neural network-based analysis of subjective video attributes
IEEE Trans. Broadcast., 69 (1) (2023), pp. 191-200, 10.1109/TBC.2022.3231100 ↗
View in Scopus ↗ Google Scholar ↗

Siami-Namini et al., 2019 S. Siami-Namini, N. Tavakoli, A.S. Namin
The performance of lstm and bilstm in forecasting time series
Proc. of Big Data '19 (2019), pp. 3285-3292, 10.1109/BigData47090.2019.9005997 ↗
View in Scopus ↗ Google Scholar ↗

Song et al., 2021 S. Song, Y.C. Zhao, X. Yao, Z. Ba, Q. Zhu

user experience and users' intention to continue the use of tiktok
Internet Res., 31 (2021), pp. 2120-2142
View article Crossref ↗ View in Scopus ↗ Google Scholar ↗

Sun et al., 2021 L. Sun, B. Liu, J. Tao, Z. Lian
Multimodal cross- and self-attention network for speech emotion recognition
Proc. of ICASSP '21 (2021), pp. 4275-4279, 10.1109/ICASSP39728.2021.9414654 ↗
View in Scopus ↗ Google Scholar ↗

van Mulbregt, 2018 P. van Mulbregt
Computing the cumulative distribution function and quantiles of the limit of the two-sided Kolmogorov-Smirnov statistic
https://arxiv.org/abs/1803.00426 ↗ (2018)
Google Scholar ↗

Vasireddi et al., 2023 N. Vasireddi, H.A. Hahamyan, Y. Kumar, M.K. Ng, J.E. Voos, J.G. Calcei
Social media may cause emergent sarms abuse by athletes: a content quality analysis of the most popular youtube videos
Phys. Sportsmed., 51 (2) (2023), pp. 175-182
Crossref ↗ View in Scopus ↗ Google Scholar ↗

Wu et al., 2019 B. Wu, W.-H. Cheng, P. Liu, B. Liu, Z. Zeng, J. Luo
Smp challenge: an overview of social media prediction challenge 2019
Proc. of ACM MM '19 (2019), pp. 2667-2671
Crossref ↗ View in Scopus ↗ Google Scholar ↗

Wu et al., 2021 Y. Wu, P. Zhan, Y. Zhang, L. Wang, Z. Xu
Multimodal fusion with co-attention networks for fake news detection
Findings of the Association for Computational Linguistics: ACL-IJCNLP 2021 (2021), pp. 2560-2569
Crossref ↗ View in Scopus ↗ Google Scholar ↗

Xie et al., 2019 J. Xie, B. Chen, X. Gu, F. Liang, X. Xu
Self-attention-based bilstm model for short text fine-grained sentiment classification
IEEE Access, 7 (2019), pp. 180558-180570, 10.1109/ACCESS.2019.2957510 ↗
View in Scopus ↗ Google Scholar ↗

Xie et al., 2020 J. Xie, Y. Zhu, Z. Zhang, J. Peng, J. Yi, Y. Hu, H. Liu, Z. Chen

popularity prediction
Proc. of WWW '20 (2020), pp. 2542-2548
Crossref ↗ View in Scopus ↗ Google Scholar ↗

Youtube data api v3, 2023 Youtube data api v3
https://developers.google.com/youtube/v3?hl=en ↗, Accessed 11th Dec 2023
Online
Google Scholar ↗

Youtube Shorts monetization policies, 2023 Youtube Shorts monetization policies
https://support.google.com/youtube/answer/12504220?hl=en ↗, Accessed 11th Dec 2023
Online
Google Scholar ↗

Zhang, 2020 T. Zhang
A brief study on short video platform and education
Proc. of ICLAHD '20, Atlantis Press (2020), pp. 543-547, 10.2991/assehr.k.201215.494 ↗
Google Scholar ↗

Zhang et al., 2018 W. Zhang, W. Wang, J. Wang, H. Zha
User-guided hierarchical attention network for multi-modal social image popularity prediction
Proc. of WWW '18 (2018), pp. 1277-1286
Crossref ↗ View in Scopus ↗ Google Scholar ↗

Zhang et al., 2020 Y. Zhang, P. Li, Z. Zhang, C. Zhang, W. Wang, Y. Ning, B. Lian
Graphinf: a gcn-based popularity prediction system for short video networks
Proc. of ICWS '20, Springer (2020), pp. 61-76
Crossref ↗ View in Scopus ↗ Google Scholar ↗

Zhao et al., 2020 H. Zhao, J. Jia, V. Koltun
Exploring self-attention for image recognition
Proc. of CVPR '20 (2020), pp. 10076-10085
Crossref ↗ Google Scholar ↗

Zhou, 2019 Q. Zhou
Understanding user behaviors of creative practice on short video sharing platforms - a case study of tiktok and bilibili
Ph.D. thesis

Google Scholar ↗

Zohourian et al., 2018 A. Zohourian, H. Sajedi, A. Yavary

Popularity prediction of images and videos on Instagram

Proc. of ICWR '18 (2018), pp. 111-117, 10.1109/ICWR.2018.8387246 ↗

View in Scopus ↗ Google Scholar ↗

Zou et al., 2022 H. Zou, Y. Si, C. Chen, D. Rajan, E.S. Chng

Speech emotion recognition with co-attention based multi-level acoustic information

Proc. of ICASSP '22 (2022), pp. 7367-7371, 10.1109/ICASSP43922.2022.9747095 ↗

View in Scopus ↗ Google Scholar ↗

View Abstract

Recommended Articles

Research article Full text access

Evaluating marketer generated content popularity on brand fan pages – A multilevel modelling approach

Shabana Chandrasekaran, ..., Supriya Kumar De

Telematics and Informatics • Volume 44 • 2019 • Article 101266

View PDF

Research article Full text access

A context-aware decision support system for selecting explainable artificial intelligence methods in business organizations

Marcelo I. Reis, ..., João M. Fernandes

Computers in Industry • Volume 165 • 2025 • Article 104233

View PDF

Research article Open access

The Recommendation Model of MiaoPai Short Video Based on Microblog

Manqing Zhu, ..., Dan Zhang

Procedia Computer Science • Volume 162 • 2019 • Pages 331-338

View PDF

Discovering patterns of online popularity from time series

Mert Ozer, ..., Emilio Ferrara

Expert Systems with Applications • Volume 151 • 2020 • Article 113337

View PDF

Research article Full text access

Keep scrolling: An investigation of short video users' continuous watching behavior

Qi Zhang, ..., Shaizatulaqma Kamalul Ariffin

Information & Management • Volume 61, Issue 6 • 2024 • Article 104014

View PDF

Research article Full text access

Multimodal sentiment analysis based on disentangled representation learning and cross-modal-context association mining

Zuhe Li, ..., Hao Wang

Neurocomputing • Volume 617 • 2025 • Article 128940

View PDF

Cited by (13)

Research article

The upside of mind wandering in influencing purchasing intention: A conditional process analysis of the moderating role of temporal distance and mediating effects of memory

Qiao L., Shen X.S.

Journal of Retailing and Consumer Services • Volume 89 • 2026 • Article 104555

Show abstract

Research article

Dynamic prediction of product competitive position: A multisource data-driven competitive analysis framework from a multi-competitor perspective

Li Y., ..., Shen Z.

Journal of Retailing and Consumer Services • Volume 85 • 2025 • Article 104289

Show abstract

Research article

and cohort dynamics

Li Y., ..., Zihayat M.

Journal of Business Venturing Insights • Volume 22 • 2024 • Article e00490

> *Citation Excerpt:*
>
> …Given our research questions, we investigate the predictive power of feature groups and individual features in both phases. Following the recommended approach (Cho et al., 2024; Chui et al., 2023; Kim et al., 2023), we compare the AUC scores with or without a control factor (i.e., a feature group/feature) each time, ceteris paribus. This approach enables us to systematically isolate the influence of a specific factor on model performance and identify which is important for startup success.…

Show abstract

SMTPD: A New Benchmark for Temporal Prediction of Social Media Popularity ↗

Xu Y., ..., Yan C.

Proceedings of the IEEE Computer Society Conference on Computer Vision and Pattern Recognition • 2025

Multimodal Sentiment Analysis of Online Product Marketing Information Based on Artificial Intelligence Neural Networks and Text Mining ↗

Huang A., ..., Song C.

IEEE Transactions on Engineering Management • Volume 72 • 2025

Multi-Pop: Enhancing user engagement with content-based multimodal popularity prediction in social media ↗

Kim J., ..., Park E.

Expert Systems • Volume 41 • 2024 • Article e13707

↗ View all citing articles on Scopus ↗

Metrics

Citations

Citation Indexes	13

Captures

Mendeley Readers	64

Article Recommended Articles Cited by (13) Metrics

News Mentions 1

PLUMX View details ↗

© 2024 Elsevier Ltd. All rights reserved.

ELSEVIER

All content on this site: Copyright © 2026 Elsevier B.V., its licensors, and contributors. All rights are reserved, including those for text and data mining, AI training, and similar technologies. For all open access content, the relevant licensing terms apply.

RELX™